3875 Cypress Drive Petaluma, CA 94954 800.228.2555 707.773.1100 Fax 707.773.1180 www.gcx.com

GCX Mounting Solutions

Installation Guide

Philips IntelliVue MP5/20/30/40/50/60/70, MX400/450/500/550/600/700/750/800/850 M-Series Arm Wall Mount Kit

Warning: MX750 and MX850 are compatible with 4-slot FMX only. Not with the 4- & 8-slot FMS

The purpose of this guide is to:

1. *Describe attachment of Table Mount to Mounting Adapter.*
2. *Describe mounting of Arm in Wall Channel.*
3. *Describe Mounting the Monitor on the Arm.*
4. *Describe operation and adjustment of M-Series Arm.*

Parts Reference

The following parts and hardware are included for this installation procedure (see photos for parts; hardware not shown).

Item #	Description	Qty
1	M-Series Arm with Mounting Adapter	1
2	M6 x 8mm Flat Head Machine Screw (FHMS)	2
3	M6 x 12mm FHMS	1
4	5/32" Hex Wrench	1
5	1/8" Hex Wrench	1
6	Spacer	1
*7	M6 x 16mm Pan Head Machine Screw (PHMS)	2

**See "Non-Table Mount" on page 3 for use of these parts.*

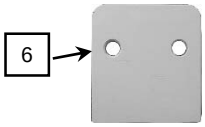

Table Mount
(Supplied by Philips)

Tools Required: Phillips screwdriver (not provided), 5/32" and 1/8" hex wrenches (provided).

Caution - Before mounting the Arm:

1. Verify that the Channel has been installed and approved in accordance with the Channel Installation guides.

2. Ensure that the weight of the device being mounted does not exceed the load rating of your M-Series Arm. Check the "Max Load" rating label located on top of the arm at the Slide pivot point. It is not recommended that this arm be used for weights outside of this range.

3. If assistance is needed regarding an application, please contact a GCX product specialist at (800) 228-2555.

Attaching the Philips Table Mount to the Mounting Adapter

Installation Note: *Do not attach the Table Mount to the Arm/Mounting Adapter if you will be mounting a monitor equipped with the mounting interface shown in photo (right). See "Mounting the Monitor on the Arm" (page 3) for instructions specific to this type of mounting plate.*

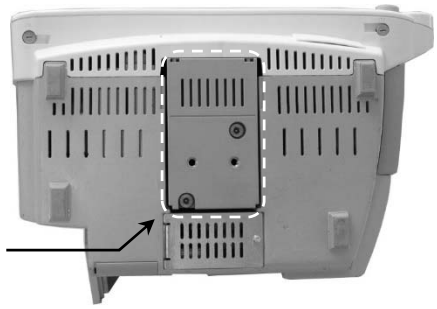

1. Fasten the Philips-supplied Table Mount to the Mounting Adapter with one (1) M6 x 12mm FHMS and two (2) M6 x 8mm FHMS (see below).

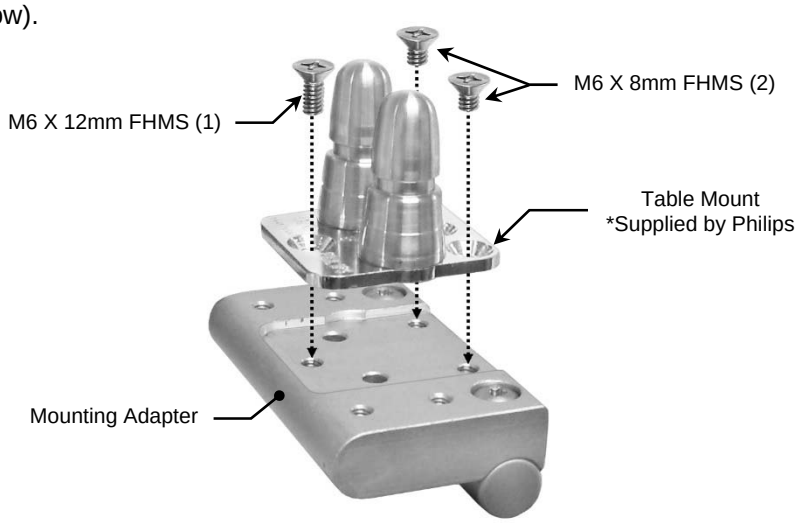

Mounting the M-Series Arm in the Wall Channel

1. While supporting the bottom of the Arm, guide the Slide (at rear of Arm) into the top of the wall channel. Slide the Arm to the desired position in the channel and tighten two (2) set screws (bottom of the Slide) using the 1/8" key.

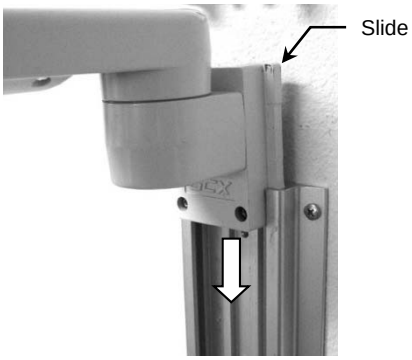

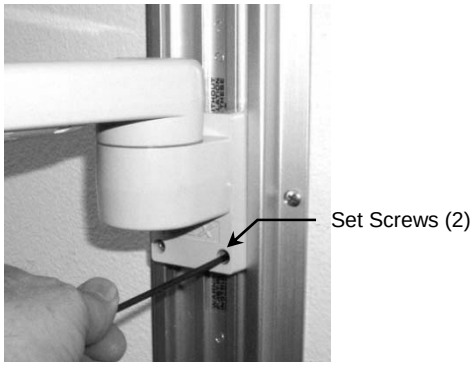

Mounting the Monitor on the Arm

Table Mount

Mount the monitor in accordance with the Philips Table Mount instruction sheet.

Non-Table Mount

1. Fit Spacer into recessed area on top of Mounting Adapter (below). Ensure Spacer remains between Mounting Adapter and monitor.
2. Insert two (2) M6 x 16mm PHMS through bottom of Mounting Adapter and thread into mounting holes in bottom of monitor (right).

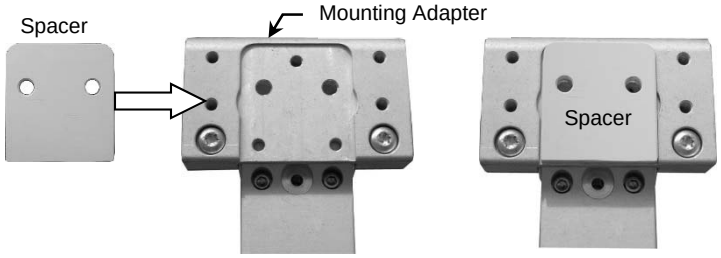

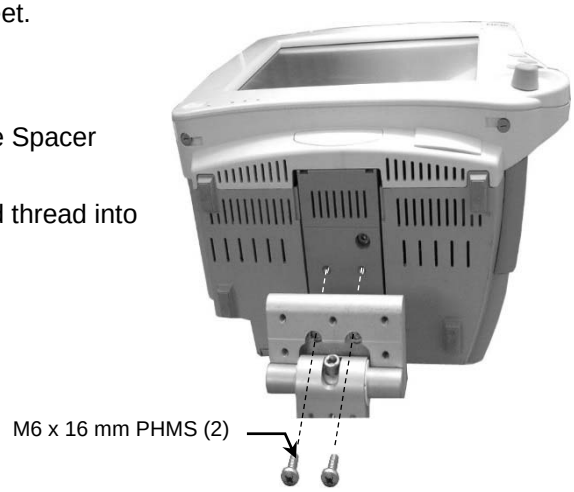

Mounting the MX400/450/500/550 Monitor (Fixed Mount Adapter)

Mount the monitor in accordance with separate Installation Guide DU-PH-0073-15 provided with the Mounting Adapter, ordered separately.

Installing the Wall Channel Cover

Install the Wall Channel Cover in accordance with the *Channel Cover Installation Guide (DU-UT-0001-20).*

M-Series Arm Operation and Adjustment

Positioning Arm in Channel

WARNING: Do not attempt to remove the Arm from the Channel while an instrument is mounted.

1. While *supporting the weight of the mounted instrument, loosen the two (2) socket head set screws (SHSS) in the Slide. A 1/8" hex key is provided for this task.
2. Push up or pull down at the end of the arm nearest the Slide. Tighten the set screws to secure the Arm in the Channel

***** It may be necessary to dismount the instrument before adjusting the Arm in the Channel.

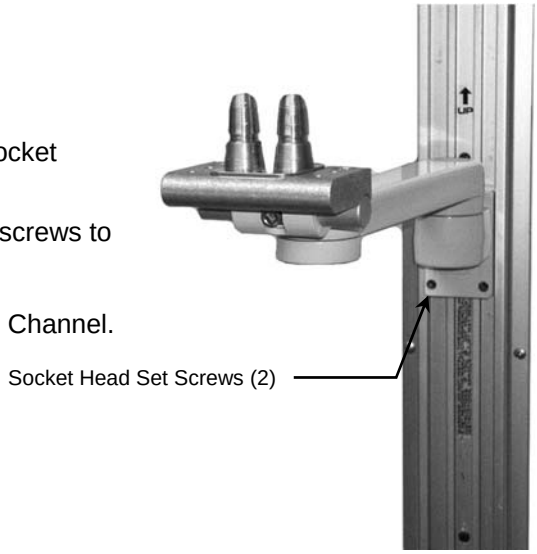

Swiveling the Mounted Instrument and Adjusting Swivel Tension

1. To swivel the mounted instrument simply push or pull the corners of the instrument.
2. To adjust swivel tension, tighten or loosen the Swivel Tension Nut using a 1/2" [13 mm] socket wrench or nut driver.

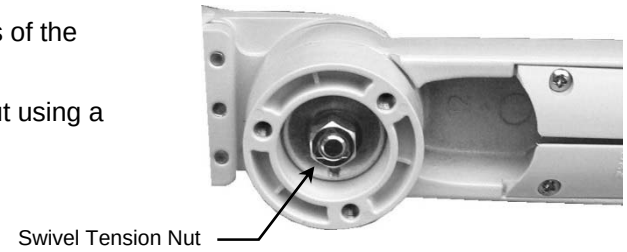

Tilting the Mounted Instrument

Installation Note: Shown without mounted device for detail purposes.

1. To tilt the instrument, grasp the top and bottom of the instrument and tilt it to the desired angle.
2. To adjust tilt tension, equally tighten or loosen the two (2) Tilt Tension Adjustment screws using the 5/32" hex wrench provided.

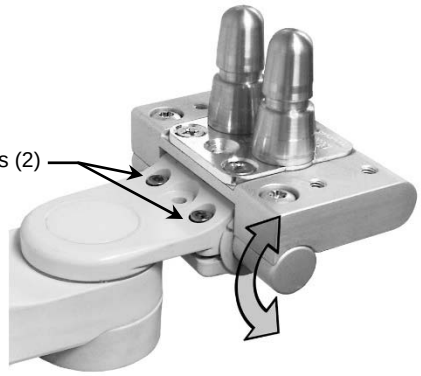

Pivoting the Arm and Adjusting Pivot Tension

1. To pivot the Arm at the Slide, simply push on the side of the Arm or mounted instrument.
2. To adjust pivot tension, loosen or tighten the Pivot Tension Bolt using a 1/2" [13 mm] socket driver.

Cable Management

Two cable management features allow convenient placement and flow of cables:

1. An open cavity beneath the arm (with flexible cable covers) allows management of cables between the front and rear of the arm.
2. A “pass-through” channel at the rear of the slide allows cables to pass behind the arm within the Channel.

   Installation Note: If cable connectors are too large to fit through the pass-through, try placing the cables in the "pass-through" before installing the arm in the Channel.

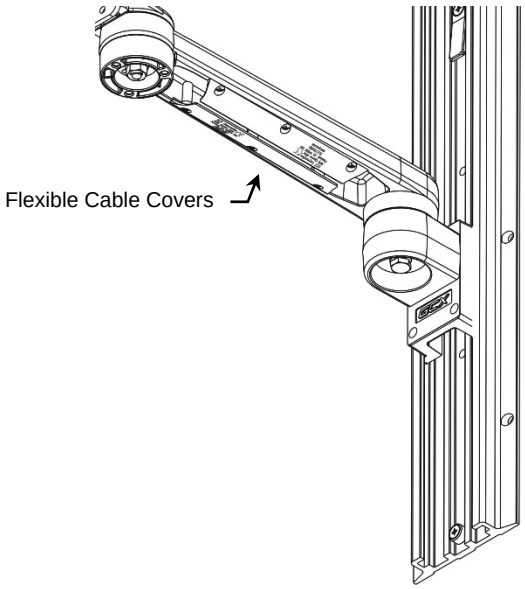

Routine Maintenance

Periodically inspect all tilting, swiveling, pivoting, and mounting hardware. Tighten as necessary for optimal operation and safety.

Cleaning the Mounting Assembly

1. The mounting assembly may be cleaned with most mild, non-abrasive solutions commonly used in the hospital environment (e.g. diluted bleach, ammonia, or alcohol solutions).
2. The surface finish will be permanently damaged by strong chemicals and solvents such as acetone and trichloroethylene.
3. Do not use steel wool or other abrasive material to clean the mounting assembly.
4. Damage caused by the use of unapproved substances or processes will not be covered by warranty. We recommend testing of any cleaning solution on a small area of the arm that is not visible to verify compatibility.
5. Do not submerge or allow liquids to enter the arm. Wipe any cleaning agents off of the arm immediately using a water-dampened cloth. Dry the arm thoroughly after cleaning.

CAUTION: GCX makes no claims regarding the efficacy of the listed chemicals or processes as a means for controlling infection. Consult your hospital's infection control officer or epidemiologist. To clean or sterilize mounted instruments or accessory equipment, refer to the specific instructions delivered with those products.